Sandringham 21 Bath 160x70cm 2 Tapholes with Handgrips and Tread Pattern

ILLUSTRATED

E0287	Sandringham 21 160cm x 70cm 2 taphole bath with handgrips and tread pattern
B9870	Sandringham 21 2 hole bath filler
S1018	Sandringham 21 front bath panel 160cm
S1020	Sandringham 21 end bath panel 70cm
S8970	Trap 1½" plastic P with 75mm seal, multi-purpose outlet suitable for plastic and BS copper pipe
S8830	Waste 1½" bath chain and overflow, plastic plug
A5901	TMV thermostatic mixing valve 22mm



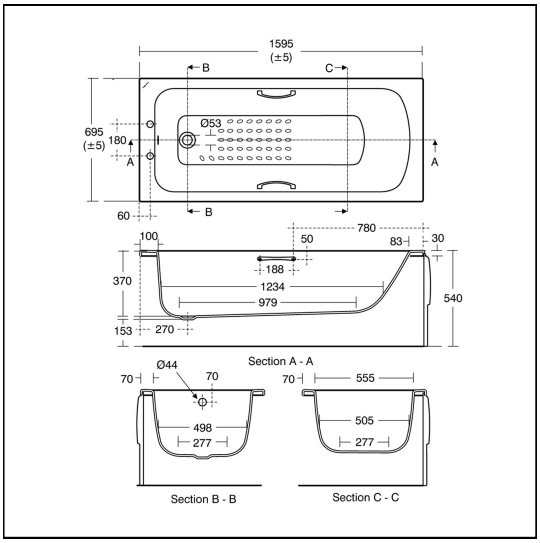



ILLUSTRATED PRODUCT DETAILS

Weights

E0287	19.00 KG
B9870	2.10 KG
S1018	3.50 KG
S1020	1.80 KG
S8970	1.00 KG
S8830	1.78 KG
A5901	1.70 KG

Materials

E0287	Idealform
B9870	Chrome Plated Brass
S1018	Acrylic
S1020	Acrylic
S8970	Plastic
S8830	Mixed Material
A5901	Chrome Plated Metal

Finishes

E0287	White (01)
B9870	Chrome (AA)
S1018	White (01)
S1020	White (01)
S8970	Neutral / No Finish (67)
S8830	Chrome (AA)
A5901	Chrome (AA)

Capacity

E0287 160.0 litres (to overflow)

Flow rates

B9870 16.5 Litres per minute @ 3 bar pressure

Standards

Constructed to EN 198:2008. EN 14516

Special Notes

The tread pattern on Sandringham 21 acrylic baths should not be considered as a fully anti-slip surface and will not prevent all slipping. Consideration should be given to safe hot water delivery and the use of an appropriate temperature reduction device see A5901AA or Part G for guidance.

ACCREDITATIONS

E0287(01)

Unified Water Label — 160.0 Litres

B9870(AA)

Unified Water Label — 16.50 Litres Per Minute

FEATURES

E: info@idealspec.co.uk | T: 0870 122 8822 | F: 0870 122 8282 | www.idealspec.co.uk

Ideal Standard (UK) Ltd. makes every effort to ensure that the information provided on its website is accurate. However, we cannot guarantee this, and accept no liability for any information or advice given via its website.

Armitage Shanks