Supplied parts:

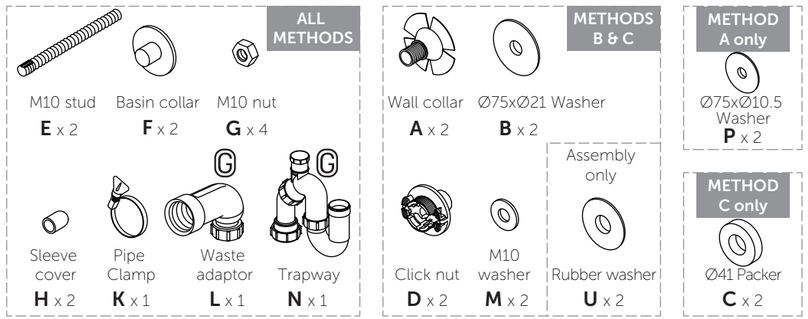

Items marked Ⓖ contain a silver biocide antimicrobial substance

Required tools:

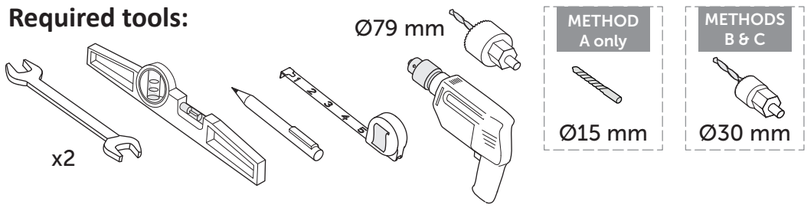

Drilled hole dimensions:

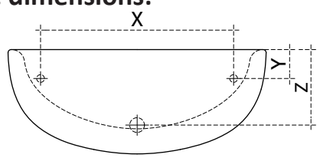

	X	Y	Z
S0430 S0431 S0432	375	55	155
S0444	475	55	155
S0433 S0435	290	55	155

National Plumbing & Drainage code:

The product covered by this installation instruction must be installed as described and in accordance with relevant local regulations. Installations not complying may void the product performance & warranty. Armitage Shanks strongly recommends that this product is fitted by a professional installer. The product is designed to meet the requirements of BS EN 274:2002 and is to be used for waste water only. To install, tighten each nut [G] with a torque no greater than 20Nm and pipe securing clip [K] no greater than 3Nm. Check for water tightness. Waste pipes must be supported; do not connect to the trap without sufficient support. Service temperature range 15°C to 90°C. Maximum operating pressure 10kPA (0.1bar).

Armitage Shanks

Armitage
Rugeley
Staffordshire
WS15 4BT
England
+44 (0)154 349 0253

Customer Care Helpline
+44 (0)154 341 3266
Customer Care Fax
+44 (0)154 341 3240

Customer Care Email
aftersalesnonresidential@armitageshanks.co.uk

Armitage Shanks pursues a policy of continuing improvement in design and performance of its products. The right is therefore reserved to vary specification without notice.

5087 02/17

SmartGuard

Panel Fixation & 1¼ Waste Connection

Assembly and Installation Instruction

METHOD A

Back of panel accessible from inside the room

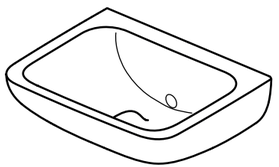

METHOD B

12 to 22mm thick panel - back of panel not accessible from inside the room

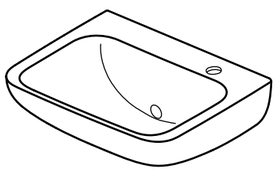

METHOD C

26 to 36mm thick panel - back of panel not accessible from inside the room

Items in this pack contain a silver biocide antimicrobial substance

S0430, S0444, S0431, S0433 & S0435

METHOD A — Back of panel accessible from inside the room

1

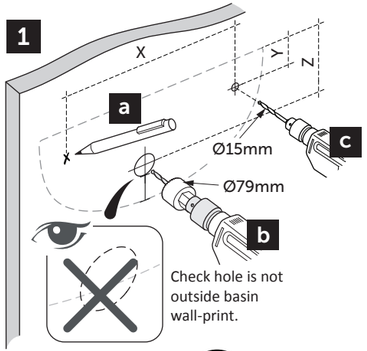

2

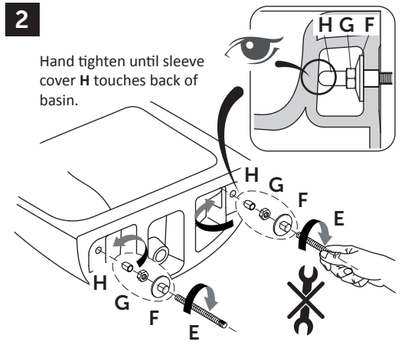

3

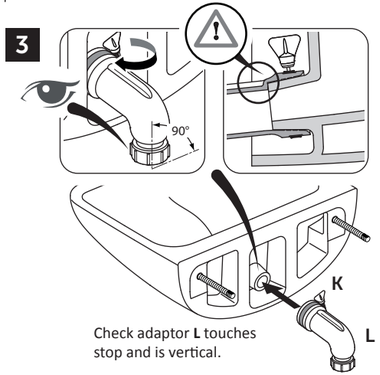

4

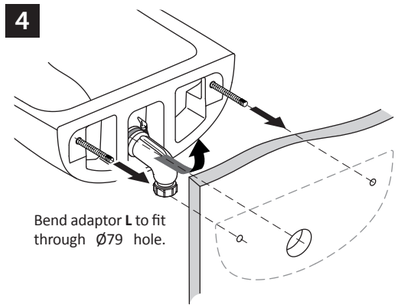

5

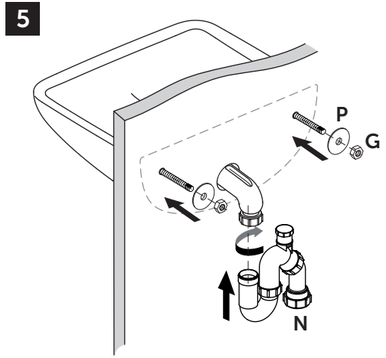

6

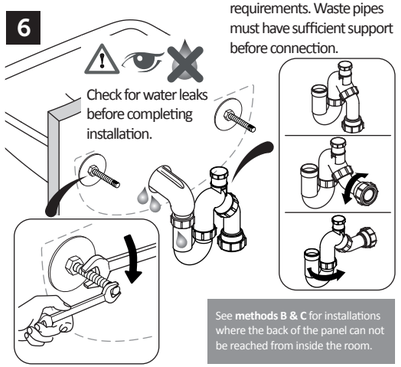

See **methods B & C** for installations where the back of the panel can not be reached from inside the room.

METHOD B — 12 to 22mm thick panel - back of panel not accessible from inside the room

1

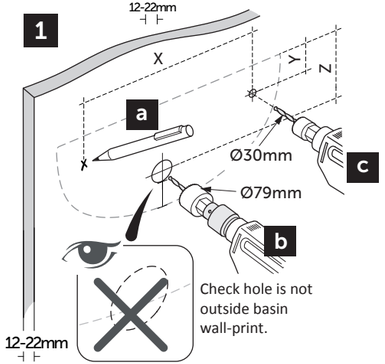

2

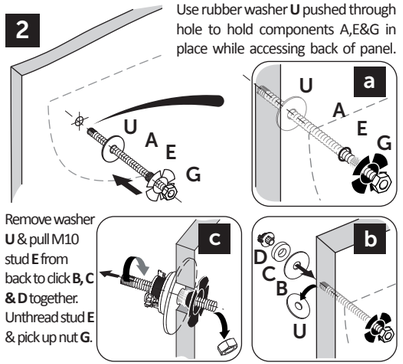

3

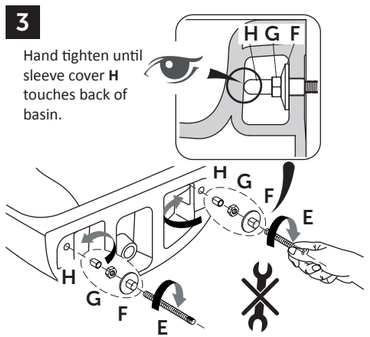

4

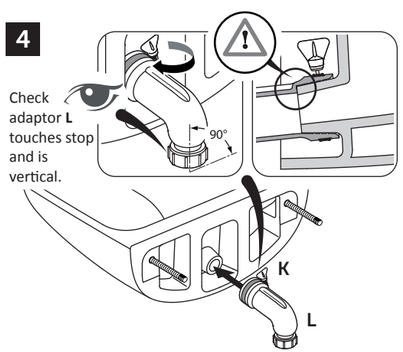

5

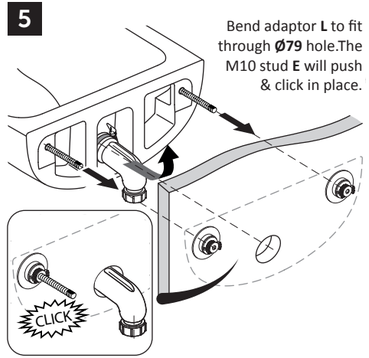

6

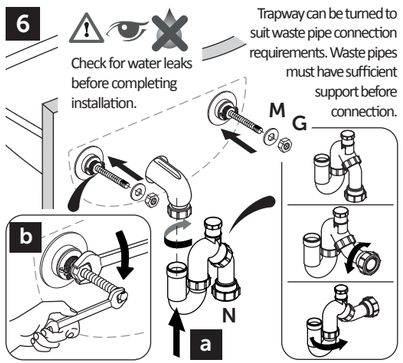

METHOD C — 26 to 36mm thick panel - back of panel not accessible from inside the room

1

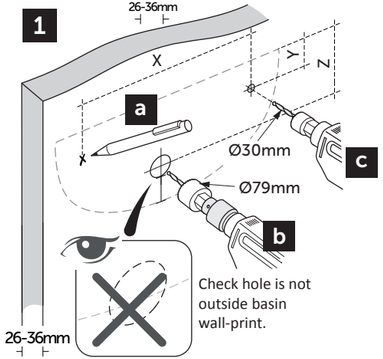

2

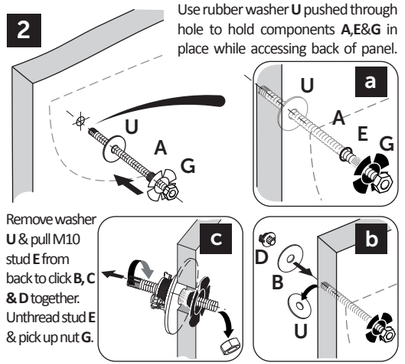

3

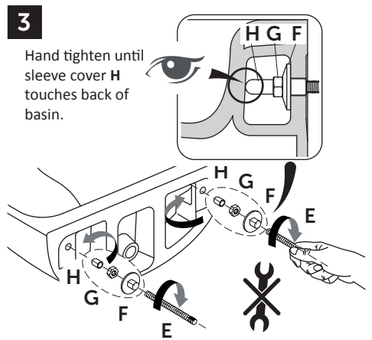

4

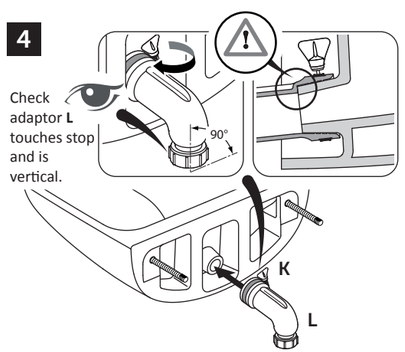

5

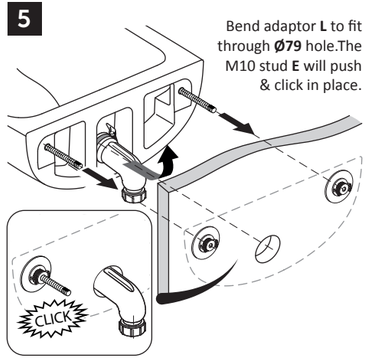
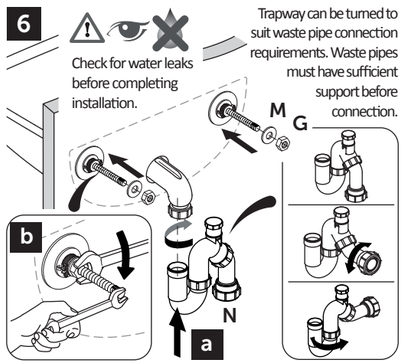
6