Product Data Sheet



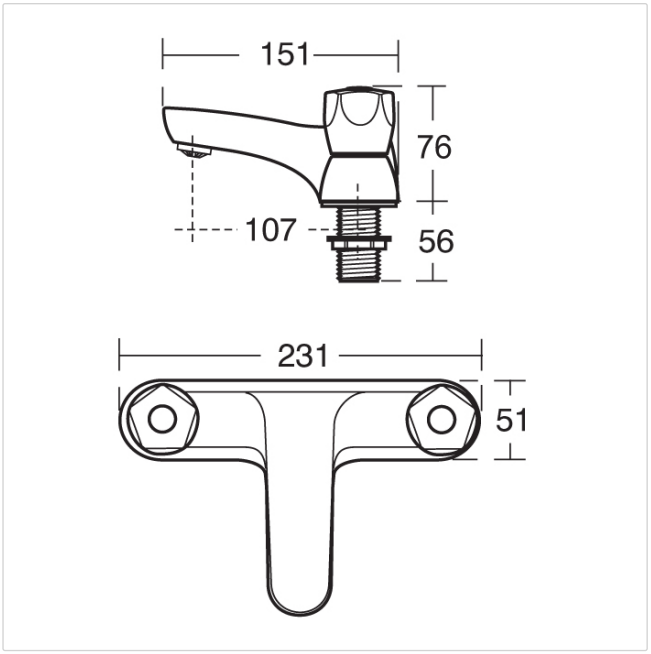

Sandringham 21 Bath Filler 2 Hole

Illustrated

B9870 Sandringham 21 bath filler 2 hole

Configuration options

Weights

B9870 2.01KG

Colours

Chromium plated (AA)

Special Notes

Suitable for balanced/unbalanced supplies high or low pressure. Inlets 3/4in BSP male coned for copper. Pillar taps come supplied with brass back nuts. Consideration should be given to safe hot water delivery and the use of an appropriate temperature reduction device see S74356A.

Frequently used applications

General Healthcare
Hotels
Residential

Armitage Shanks
Tel: 0870 122 8822
Fax: 0870 122 8282
Email: info@idealspec.co.uk
Web: www.idealspec.co.uk

Ideal Standard (UK) Ltd. makes every effort to ensure that the information provided on its website is accurate. However, we cannot guarantee this, and accept no liability for any information or advice given via its website.

Powered by IdealSpec

Date created:26/07/2013