inspiration

Product

IX200025BK - Enzo Black Safe-Touch Dual Outlet Thermostatic Shower with Telescopic Riser Kit, Overhead Soaker & Handset

Technical Specification

Max Inlet Pressure (static):	5 Bar
Min Inlet Pressure (dynamic):	0.5 Bar
Max Inlet Temperature:	65°C
Factory Pre-set Temperature:	38°C with max temp stop
Temperature Stability:	+/-2°C
Inlet Connections with fast fix:	15mm
Outlet Connections:	G1/2" BSP
Min Temperature Differential Between Hot Inlet and Mixed Outlet to Achieve Cold Water Failsafe:	15°C

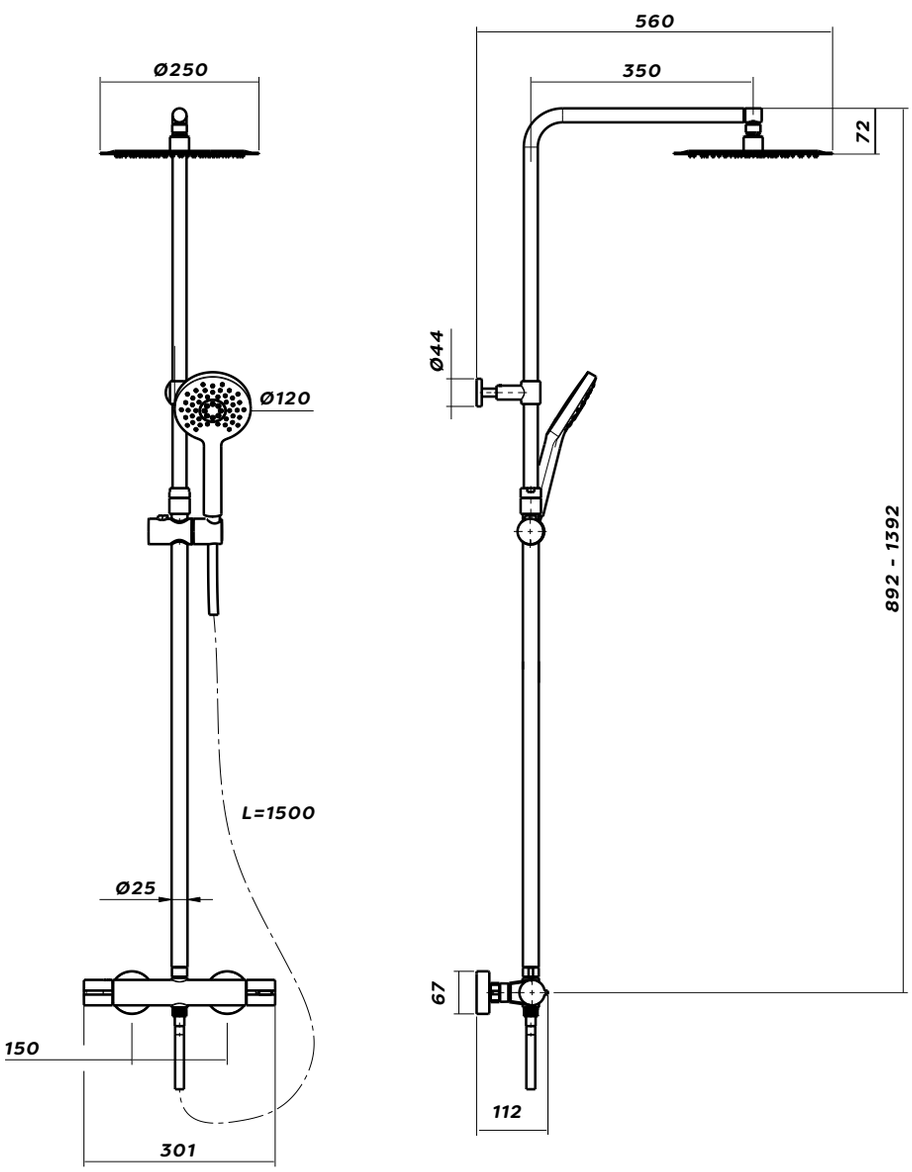

Additional Information

Anti-scald thermostatic technology with fail safe protection on both the hot and cold supplies

Safe-touch body

Fully adjustable telescopic riser kit with large stainless steel overhead soaker

Metal Handles

Smooth anti-twist hose

Sliding handset holder

Multi-function handset

Fast fix brackets

Intatec, Airfield Industrial Estate, Hixon, Stafford, ST18 0PF
T. 01889 272180 F. 01889 272181 E. sales@intatec.co.uk
www.intatec.co.uk

08/24
E&OE